Piu





Piu

A design to experience the sense of “being at home” in every living and working space. Piu sofa series invite the user to feel the comfort and adapts itself easily to different settings with its modern design.

Piu, an ideal choice of sofa for various spaces, stands out with its timeless details. With its wide armrests, minimal leg design, soft seating and backrest and material quality, it brings comfort to spaces not only visually but also sensually.



Designer

Alp Nuhoğlu - 2020

Piu

Sofa

Indoor



Product Details



The cylindrical slim metal legs can be customised in harmony with its fabrics and the details in the interior with material options in B&T Design’s catalogue.



The backrest cushions of Piu are made of silicone padding while its seat cushions are made of 14 mm foam filling. Either the seat cushions or the backrest cushions can be taken out.



Piu

Sofa

Indoor

Finish Options

A rich range of material choices is provided for Go Large series to create the best match within interior style.

Metal Leg Finishes

Electrostatic Powder Coating



Upholstery

Fabric, Leather, Artifical Leather.
COM and COL options are also available

Modules

	textile fabric (mt)	real leather (m²)
Single	5,5	8,25
Double 180	11	16,5
Triple 220	11	16,5
Triple 250	12	18
125 Right	9	13,5
125 Left	9	13,5
155 Right	10	15
155 Left	10	15
195 Right	10	15
195 Left	10	15
225 Right	12	18
225 Left	12	18
125 Lounge Right	8	12
125 Louunge Left	8	12
84,5 Corner	5,5	8,25
Pouf 82x50x41	2,1	3,15
Pouf 82x82x41	2,1	3,15
Pouf 100x100x41	2,2	3,3
Pouf 130x50x41	2,6	3,9
Pouf 170x50x41	3,4	5,1

Configurations

	textile fabric (mt)	real leather (m²)
Plan 1	14,8	22,2
Plan 2	17	25,5
Plan 3	23,5	35,25
Plan 4	16,75	25,2
Plan 5	26,5	39,75
Plan 6	24	36
Plan 7	14	21
Plan 8	20	30
Plan 9	25	37
Plan 10	17	25,5
Plan 11	18	27

More options are downloable in the catalogues

MATERIAL CATALOGUE

FABRIC & LEATHER CATALOGUE

Models of Product

Double



Single



Pouf



Dimensions (cm)

Modules

Single

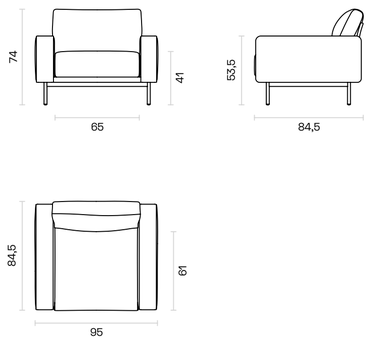

Double 180

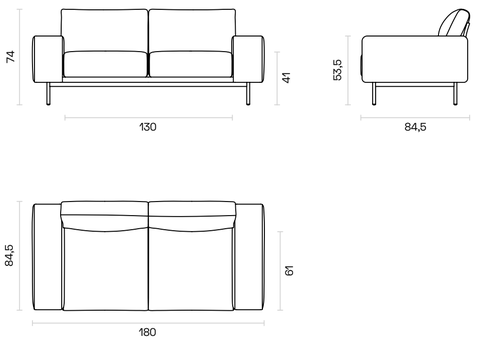

Triple 220

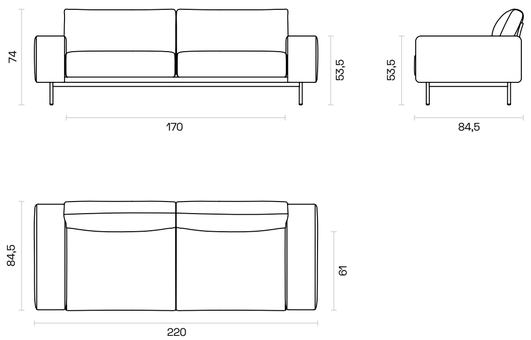

Triple 250

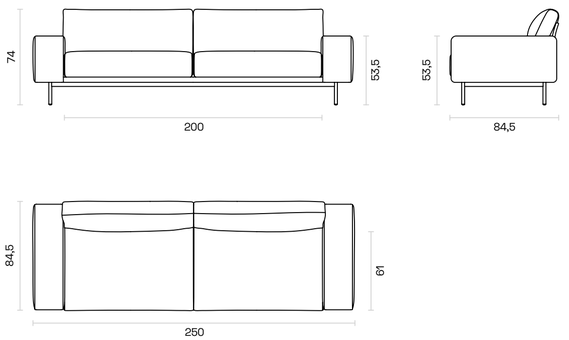

Dimensions (cm)

125 Right - 125R

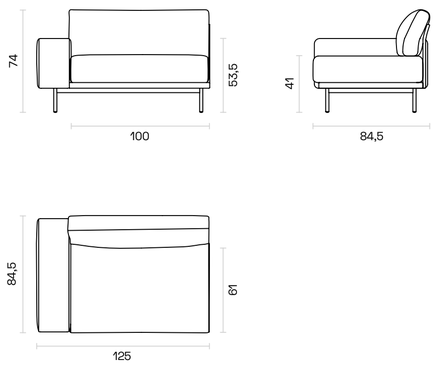

125 Left - 125L

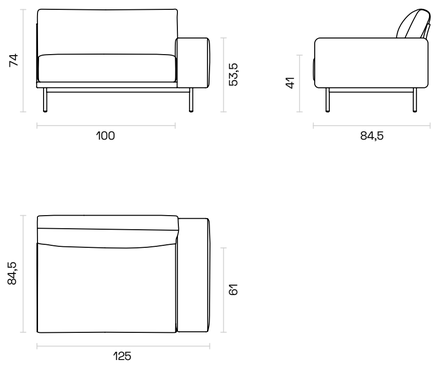

155 Right - 155R

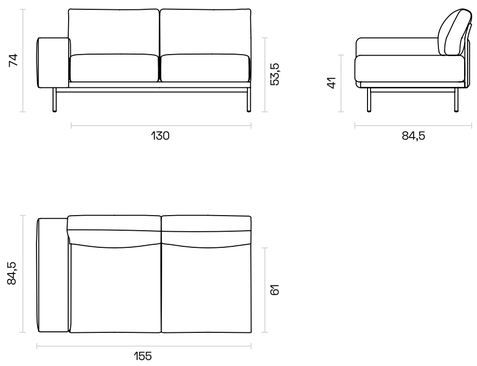

155 Left - 155L

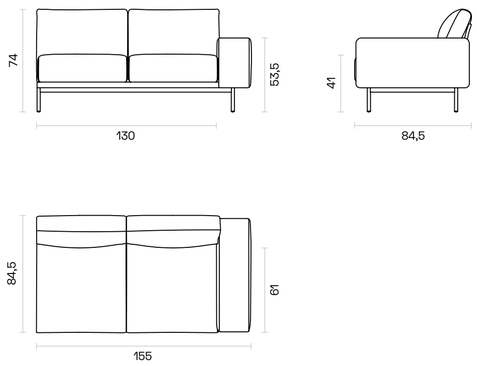

Dimensions (cm)

195 Right - 195R

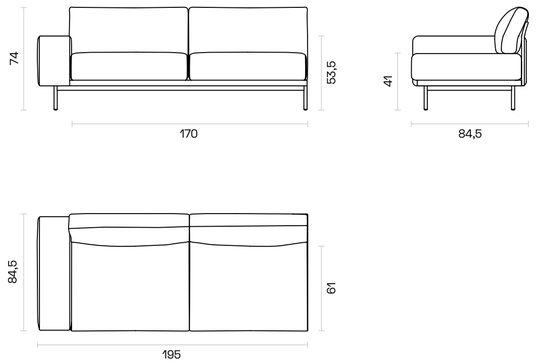

195 Left - 195L

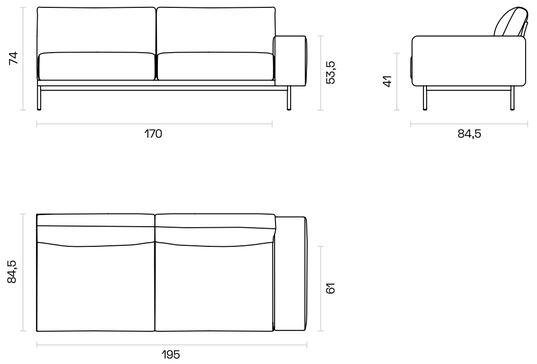

225 Right - 225R

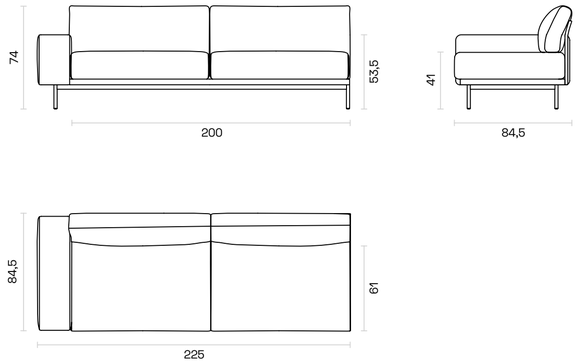

225 Left - 225L

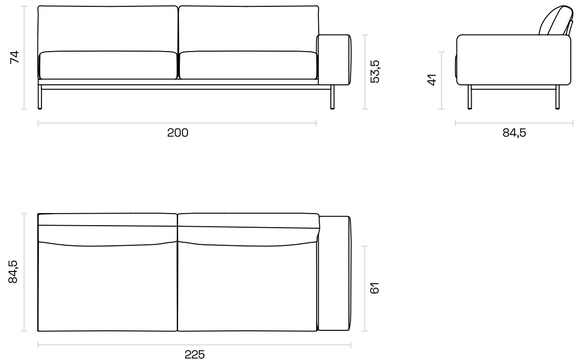

Dimensions (cm)

125 Lounge Right- 125LR

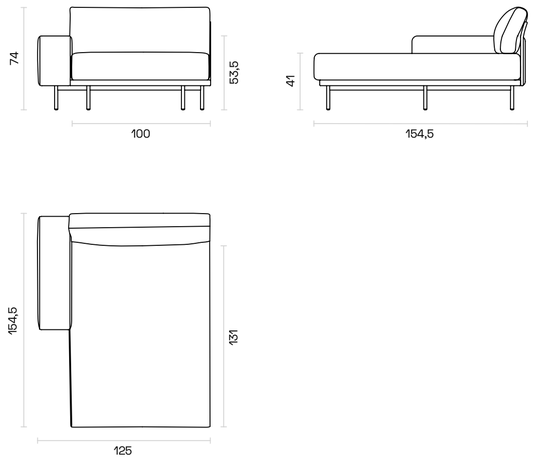

125 Lounge Left - 125LL

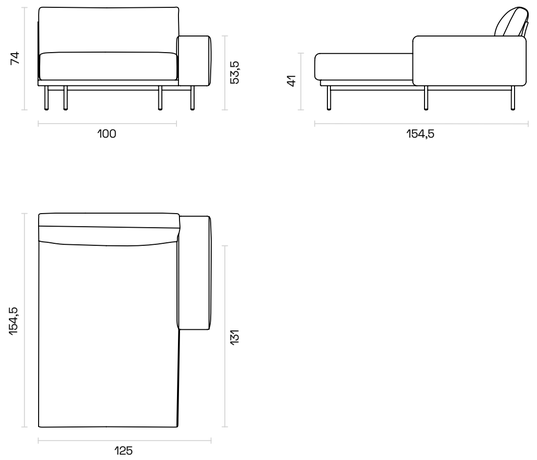

84,5 Corner - 84,5C

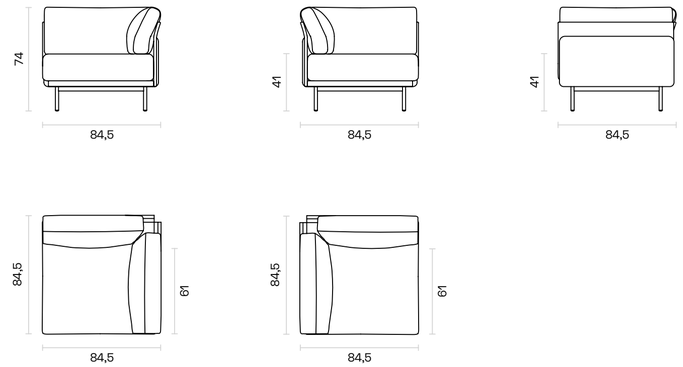

Dimensions (cm)

Pouf 41H - P82x50

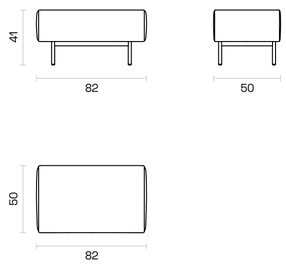

Pouf 41H - P100x100

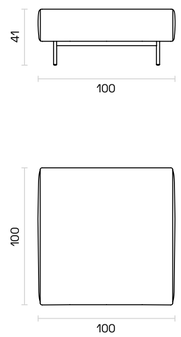

Pouf 41H - P82x82

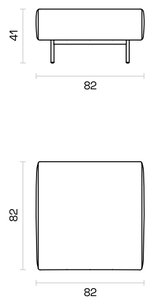

Pouf 41H - P130x50

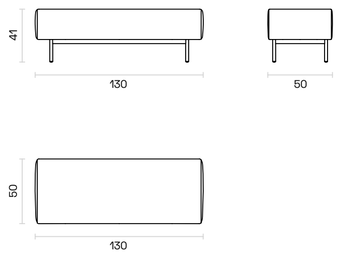

Pouf 41H - P170x50

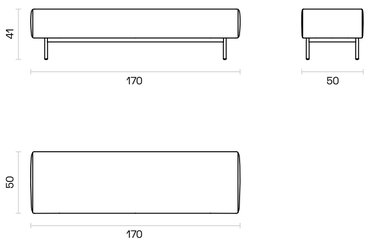

Configurations

Plan 01



Plan 02



Plan 03



Plan 04



Plan 05



Plan 06



Plan 07



Plan 08



Plan 09



Plan 10



Plan 11



Dimensions (cm)

Plan 01

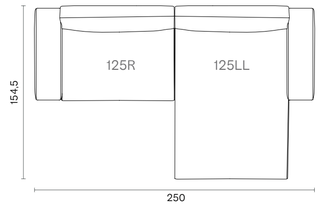

Plan 02

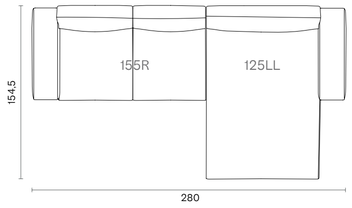

Plan 03

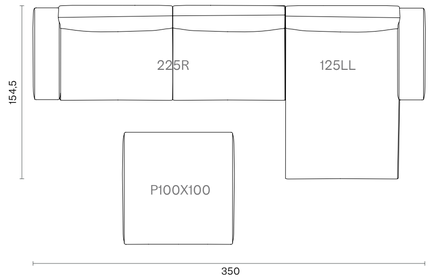

Plan 04

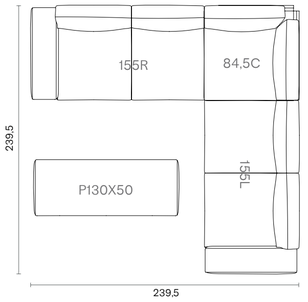

Dimensions (cm)

Plan 05

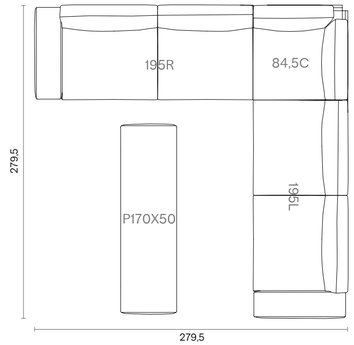

Plan 06

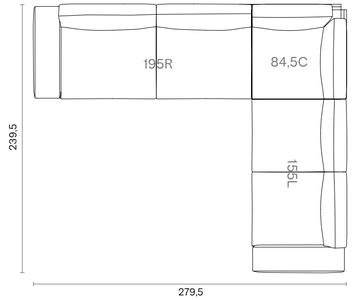

Plan 07

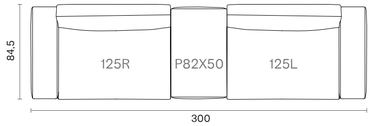

Plan 08

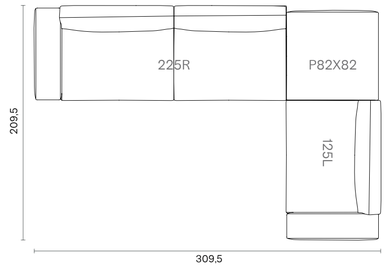

Dimensions (cm)

Plan 09

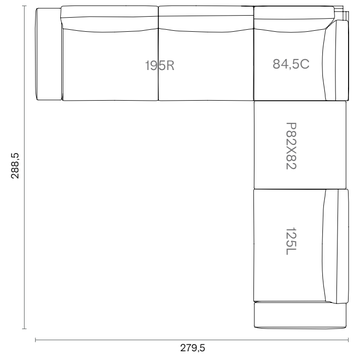

Plan 10

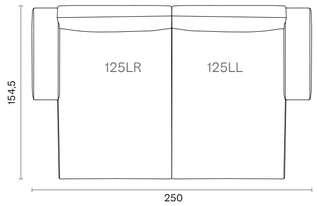

Plan 11

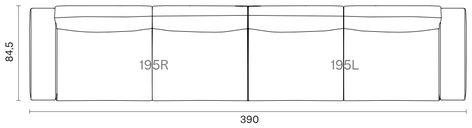

Downloads

2D & 3D FILES

PRODUCT IMAGES

CERTIFICATES

You can run this product
with following system:

pCon PLANNER





Piu

Sofa

Indoor

Technical Specifications

Modules

	Package Dimensions (cm)	Volume (m^3)	Weight (kg)	Seat / Structure	Base
Single	110x100x70 quantity in box: 1	0,76	35	Plywood + HR Foam + Elastic Webbing / Metal Structure	ø25 mm Metal Tube + Electrostatic Powder Coated
Double 180	190x100x70 quantity in box: 1	1,37	45		
Triple 220	230x100x70 quantity in box: 1	1,62	55		
Triple 250	260x100x70 quantity in box: 1	1,83	66		
125 Right	135x90x70 quantity in box: 1	0,90	40		
125 Left	135x90x70 quantity in box: 1	0,90	40		
155 Right	165x90x70 quantity in box: 1	1,05	45		
155 Left	165x90x70 quantity in box: 1	1,05	45		
195 Right	205x90x70 quantity in box: 1	1,30	50		
195 Left	205x90x70 quantity in box: 1	1,30	50		

Technical Specifications

Modules

	Package Dimensions (cm)	Volume (m^3)	Weight (kg)	Seat / Structure	Base
225 Right	235x90x70 quantity in box: 1	1,45	55	Plywood + HR Foam + Elastic Webbing / Metal Structure	ø25 mm Metal Tube + Electrostatic Powder Coated
225 Left	235x90x70 quantity in box: 1	1,45	55		
125 Lounge Right	135x160x70 quantity in box: 1	1,55	55		
125 Lounge Left	135x160x70 quantity in box: 1	1,55	55		
84,5 Corner	90x90x70 quantity in box: 1	0,60	30		
Pouf 82x50x41H	90x55x35 quantity in box: 1	0,20	13		
Pouf 82x82x41H	90x90x35 quantity in box: 1	0,30	18		
Pouf 100x100x41H	105x105x35 quantity in box: 1	0,38	25		
Pouf 130x50x41H	135x55x35 quantity in box: 1	0,26	17		
Pouf 170x50x41H	175x55x35 quantity in box: 1	0,35	23		

Technical Specifications

Configurations

	Package Dimensions (cm)	Volume (m^3)	Weight (kg)	Seat / Structure	Base
Plan 01	130x90x70 quantity in box: 1	1,90	60	Plywood + HR Foam + Elastic Webbing / Metal Structure	ø25 mm Metal Tube + Electrostatic Powder Coated
Plan 02	160x90x70 quantity in box: 1	2,50	60		
Plan 03	230x90x70 quantity in box: 1	3,50	65		
Plan 04	245x90x70 quantity in box: 1	3,50	65		
Plan 05	200x90x70 quantity in box: 1	3,35	75		
Plan 06	200x90x70 quantity in box: 1	2,90	70		
Plan 07	130x90x70 quantity in box: 1	1,90	65		
Plan 08	230x90x70 quantity in box: 1	2,60	75		
Plan 09	200x90x70 quantity in box: 1	2,95	75		
Plan 10	130x160x70 quantity in box: 1	3	55		
Plan 11	200x90x70 quantity in box: 1	2,60	45		

CARE AND MAINTENANCE

Care and maintenance instructions &
warranty certificate **click and download**



www.bt.design

Showroom

Istanbul
istanbul@bt.design

Ankara
ankara@bt.design

London
london@bt.design

Factory

Istanbul
fabrika@bt.design

Bulgaria
europe@bt.design

Export

export@bt.design