Round





Round

Lounge

Indoor

Round

Round brings sculptural softness and visual clarity to environments that blend comfort with expression.





As one of the first designs in the B&T collection, it continues to stand out with its timeless presence and distinctive circular form.

Round

Lounge

Indoor

Designer

Alp Nuhoğlu - 2009



Round

Lounge

Indoor

Product Details



Defined by its generous proportions and wraparound armrests, Round offers a focused and welcoming seating experience. Its singular volume creates a strong visual anchor in living, leisure, and workspaces.



For settings where privacy and functionality are essential, the Round Private version features a high backrest that creates a more secluded atmosphere. It can be complemented with a 360-degree rotating tablet arm in a choice of materials, supporting individual work and personal moments throughout the day.

Finish Options

A rich range of material choices is provided for Round series to create the best match within interior style.

Metal Finishes

Electrostatic Powder Coating

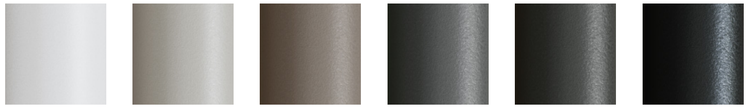

White
RAL 9016

Silk Grey
RAL 7044

Taupe
G 876

Grey
G 458

Anthracite
RAL 7016

Black
RAL 9005

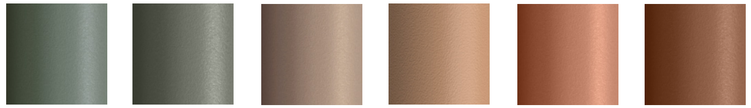

Cement Grey
RAL 7033

Green Grey
RAL 7009

Precious
Sand

Metallic
Earth

Beige Red
RAL 3012

Terracotta
RAL 8004

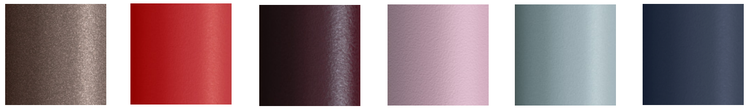

Bronze

Tomato Red
RAL 3013

Black Red
RAL 3007

Pastel Violet
RAL 4009

Nordic
Lichen

Steel Blue
RAL 5011



Gold

Table Top Materials

Natural Veneer (18mm)



White
RAL 110-1
(Ash)

Silk Grey
RAL 7044
(Ash)

Taupe
G 876
(Ash)

Grey
G 458
(Ash)

Anthracite
RAL 7016
(Ash)

Black
RAL 9005
(Ash)

Cement Grey
RAL 7033
(Ash)



Green Grey
RAL 7009
(Ash)

Precious
Sand
(Ash)

Light Mocha
(Ash)

Dark Mocha
(Ash)

Natural
(Ash)

Metalic
Earth
(Ash)

Beige Red
RAL 3012
(Ash)



Terracotta
RAL 8004
(Ash)

Tomato Red
RAL 3013
(Ash)

Black Red
RAL 3007
(Ash)

Pastel Violet
RAL 4009
(Ash)

Nordic
Lichen
(Ash)

Steel Blue
RAL 5001
(Ash)

Table Top Materials

Laminate (18 mm)


Black
3190

Polar White
3097


Beige Grey
3151


Midnight
Ash 3242


Walnut
Opera 4481


Saratoga
Cream
4662

Upholstery

Fabric, Leather, Artifical Leather.
COM and COL options are also available

textile fabric yardage (mt)	Round Private	3,3 4
real leather square meter (m^2)	Round Private	3,8 4,6

More options are downloable in the catalogues

MATERIAL CATALOGUE

FABRIC & LEATHER CATALOGUE





Round

Lounge

Indoor

Models of Product

Metal
Swivel



Private
Swivel / Tablet Arm



Round

Lounge

Indoor

Dimensions (cm)

Metal
Swivel

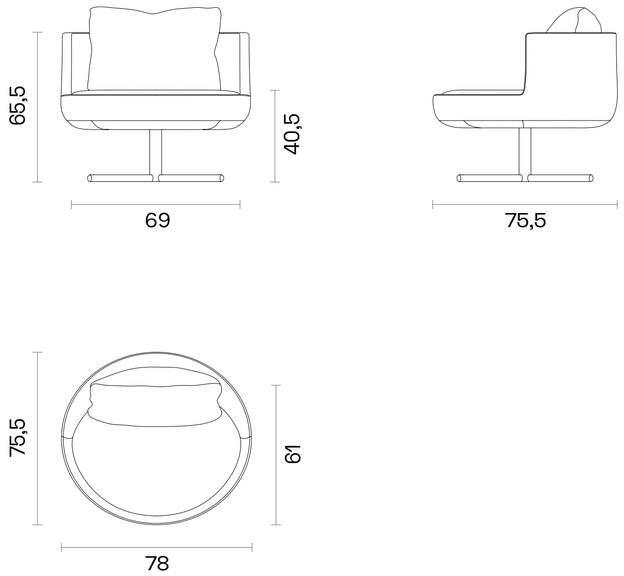

Private
Swivel / Tablet Arm

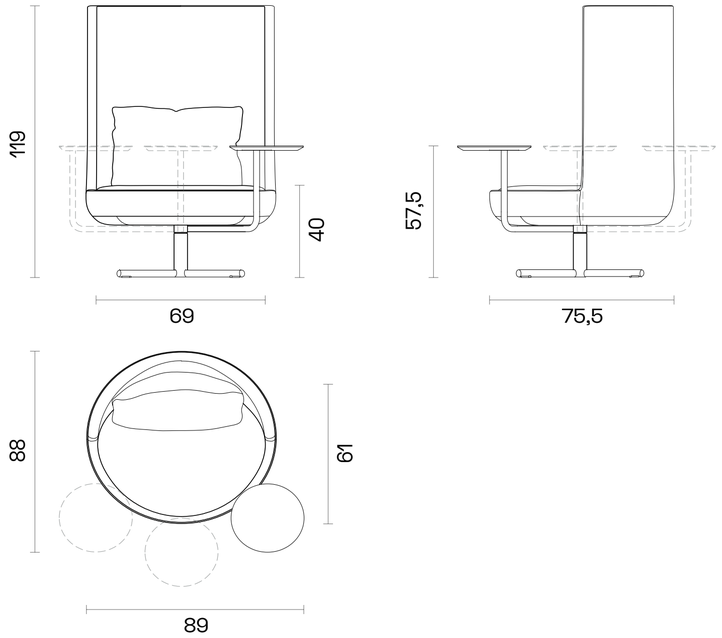

360-degree rotating tablet arm

Round

Lounge

Indoor

Downloads

2D & 3D FILES

PRODUCT IMAGES

CERTIFICATES

You can run this product with following system:

pCon PLANNER







Round

Lounge

Indoor

Technical Specifications | Lounge

Package Dimensions (cm)	Round S Private S	79x79x70 quantity in box: 1 80x80x125 quantity in box: 1
Volume (m^3)	Round S Private S	0,48 1,05
Weight (kg)	Round S Private S	17,6 25,4
Base	Swivel Wood Base Swivel Metal Base	Metal Legs with Wood Cover 27mm Metal Tube
Seat	Polyurethane	
Back	60x40 Ball Fibre Cushion	

S: Swivel

CARE AND MAINTENANCE

Care and maintenance instructions &
warranty certificate **click and download**



B&T

www.bt.design

Showroom

Istanbul
istanbul@bt.design

Ankara
ankara@bt.design

London
london@bt.design

Factory

Istanbul
fabrika@bt.design

Bulgaria
europe@bt.design

Export

export@bt.design

Indoor