Drage





Drage

Seating Islands - Low Table

Indoor

Drage

Meet the Drage family, bringing energy and dynamism to waiting areas, with their organic forms which render their modest and refined design timeless.



Distinguished with their modest design, the Drage family supports the creation of a holistic and balanced perception of space, while its low tables stand out with their circular forms, enabling possible matches specific to the language of aesthetics and the needs of use of wherever they are, thanks to their three different heights and widths, their options of sheet metal surface, and colour alternatives.



Designer

Alp Nuhoğlu - 2021







Finish Options

A rich range of material choices is provided for Drage series to create the best match within interior style.

Metal Finishes

White
RAL 9016

Silk Grey
RAL 7044

Taupe
G 876

Grey
G 458

Anthracite
RAL 7016

Black
RAL 9005

Cement Grey
RAL 7033

Green Grey
RAL 7009

Precious
Sand

Metallic
Earth

Beige Red
RAL 3012

Terracotta
RAL 8004

Bronze

Tomato Red
RAL 3013

Black Red
RAL 3007

Pastel Violet
RAL 4009

Nordic
Lichen

Steel Blue
RAL 5011

Gold

Upholstery

Fabric, Leather, Artifical Leather.
COM and COL options are also available

Modules

textile fabric (m)	Ø140 cm	5,2
	Ø152 cm	5,5
	Ø180 cm	6,2
	160 cm	3,3
	220 cm	4,5
	270 cm	5,5
	267x203 cm	7,7
	327x203 cm	8,8
	352,5x257,5 cm	10
	377x203 cm	9,8
real leather (m²)	Ø140 cm	8,5
	Ø152 cm	9,3
	Ø180 cm	10,8
	160 cm	5,7
	220 cm	7,5
	270 cm	9,0
	267x203 cm	12,3
	327x203 cm	13,9
	352,5x257,5 cm	15,7
	377x203 cm	15,4

Edge Detail

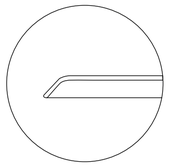

Metal
12 mm

More options are downloable in the catalogues

MATERIAL CATALOGUE

FABRIC & LEATHER CATALOGUE



Drage

Seating Islands - Low Table

Indoor

Models of Product

Low Table

Round



Models of Product

Seating Islands







Dimensions (cm)

Low Table

Round
ø48x52h

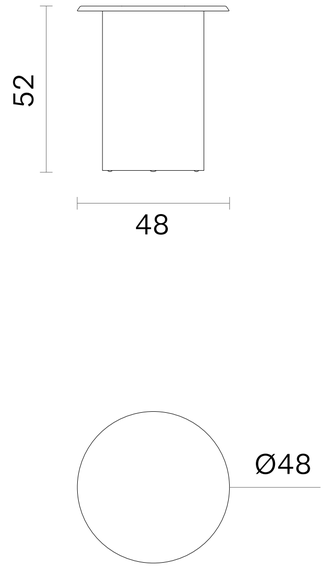

Round
Ø68x42h

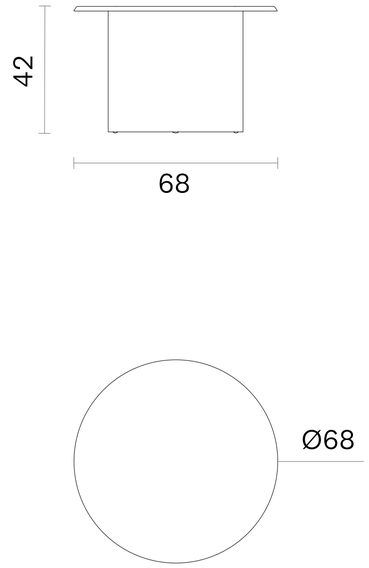

Round
Ø88x32h

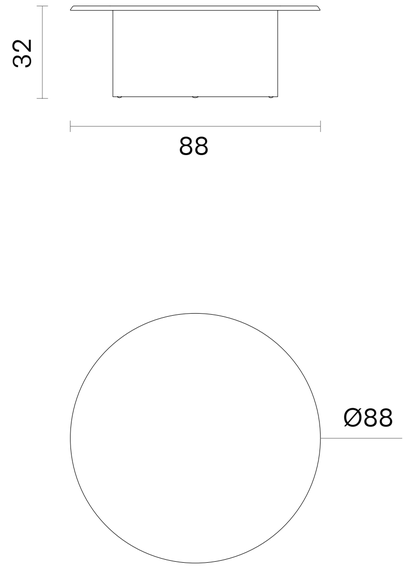

Dimensions (cm)

Seating Islands

Round 140

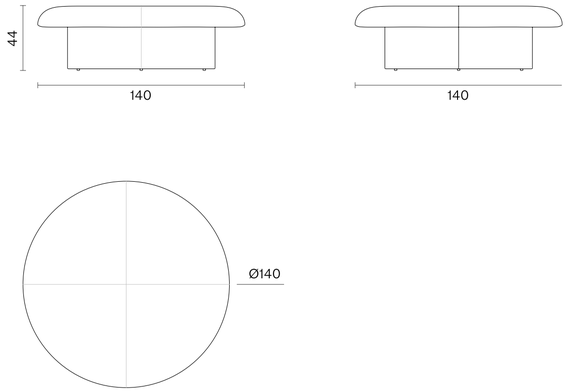

Round 152

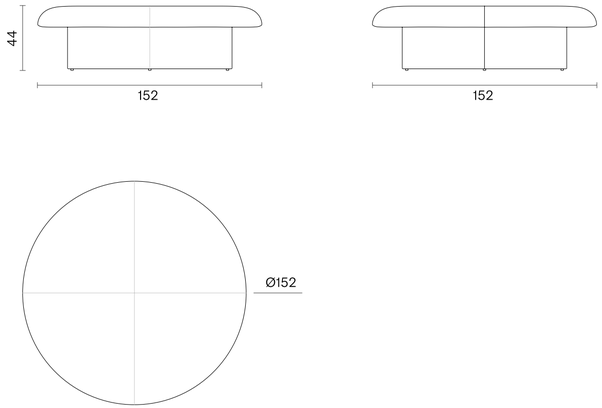

Round 180

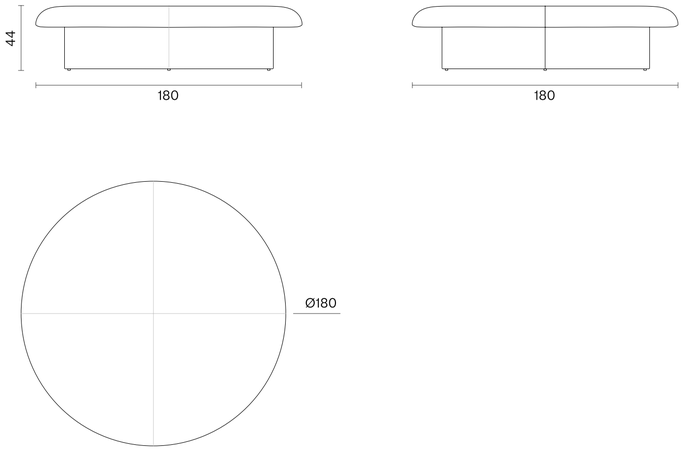

Dimensions (cm)

Straight 160

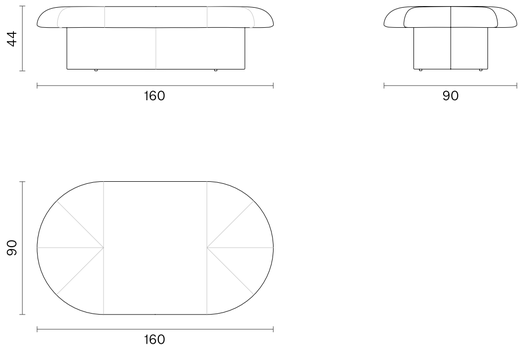

Straight 220

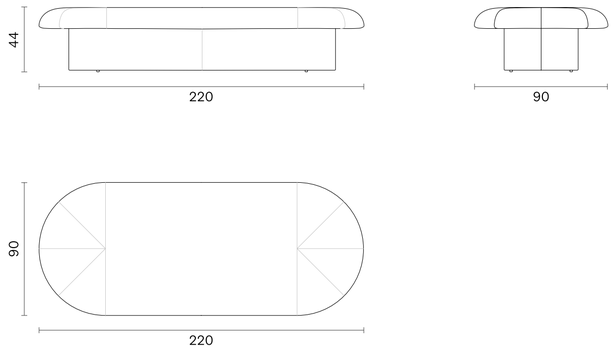

Straight 270

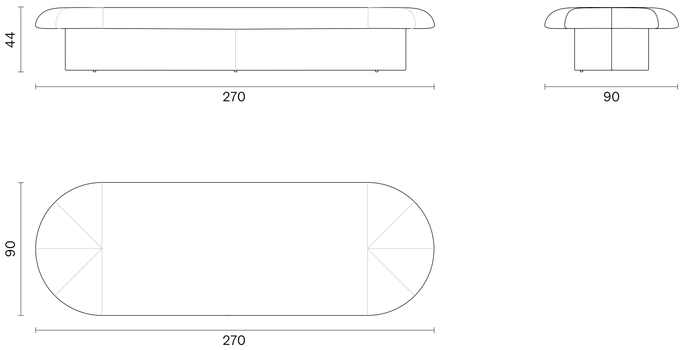

Dimensions (cm)

Corner 267

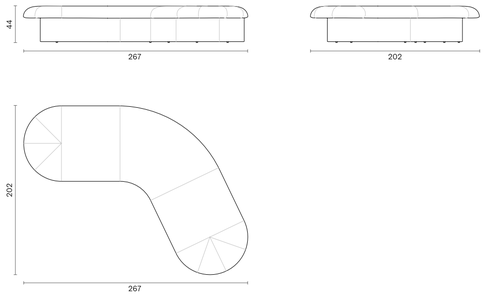

Corner 327

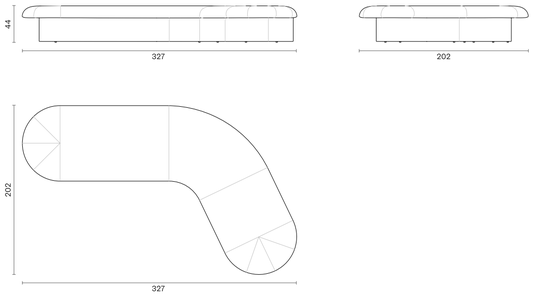

Corner 352

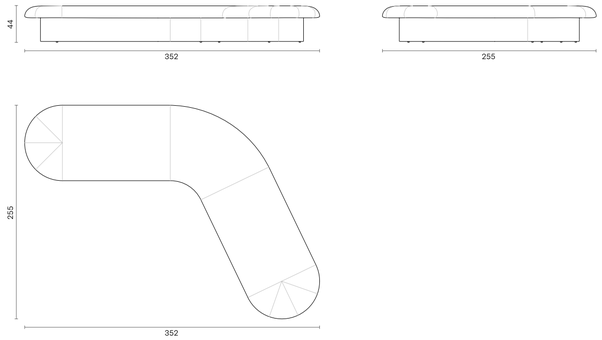

Corner 377

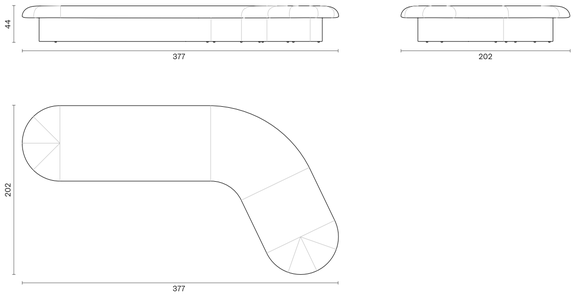

Downloads

2D & 3D FILES

PRODUCT IMAGES

CERTIFICATES

You can run this product with following system:

pCon PLANNER



Drage

Seating Islands - Low Table

Indoor

Technical Specifications Seating Islands

	Package Dimensions (cm)	Volume (m³)	Structure	Seat
Ø140	150x150x50 quantity in box: 1	1,25	Plywood	HR Foam
Ø152	160x160x50 quantity in box: 1	1,28		
Ø180	190x10x50 quantity in box: 1	1,80		
Straight 160	170x100x50 quantity in box: 1	0,85		
Straight 220	230x100x50 quantity in box: 1	1,15		
Straight 270	280x100x50 quantity in box: 1	1,40		
Corner 267x203	277x213x50 quantity in box: 1	2,15		
Corner 327x203	337x213x50 quantity in box: 1	3,25		
Corner 352,5x257,5	362x267x50 quantity in box: 1	4,35		
Corner 377x203	387x213x50 quantity in box: 1	3,71		

Technical Specifications Low Table

	Size	Package Dimensions (cm)	Metal 12 mm		Base
			Volume (m³)	Weight (kg)	
Round	Ø48x52h	55x55x60 quantity in box: 1	0,20	14.0	Metal + Electrostatic Powder Coated
	Ø68x42h	75x75x50 quantity in box: 1	0,25	20.0	
	Ø88x32h	95x95x38 quantity in box: 1	0,35	23.5	

CARE AND MAINTENANCE

Care and maintenance instructions & warranty certificate **click and download**



www.bt.design

Showroom

Istanbul
istanbul@bt.design

Ankara
ankara@bt.design

London
london@bt.design

Factory

Istanbul
fabrika@bt.design

Bulgaria
europe@bt.design

Export

export@bt.design